SEZIONE 5: Tubi

SECTION 5: Tubes

CHAPITRE 5: Tubes

TEIL 5: Rohre

comer industries
driveshafts

Tubi per cardani omocinetici CvJ
Tubes for PTO drive shafts CvJ
Tubes pour arbres à cardan CvJ
Rohre für Weitwinkelgelenkwellen CvJ

Serie V / *Series V* / Série V / *Serie V* 58

Serie T / *Series T* / Série T / *Serie T* 59

Tubi per cardani
Tubes for PTO drive shafts
Tubes pour arbres à cardan
Rohre für Gelenkwellen

Serie V / *Series V* / Série V / *Serie V* 60

Serie T / *Series T* / Série T / *Serie T* 61

Serie E / *Series E* / Série E / *Serie E* 62

Serie D / *Series D* / Série D / *Serie D* 63

Note / *Notes* / Notes / *Bemerkungen* 64

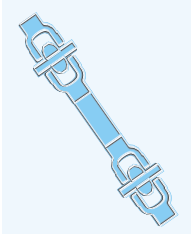

SERIE V
SERIES V
SERIE V
SERIE V

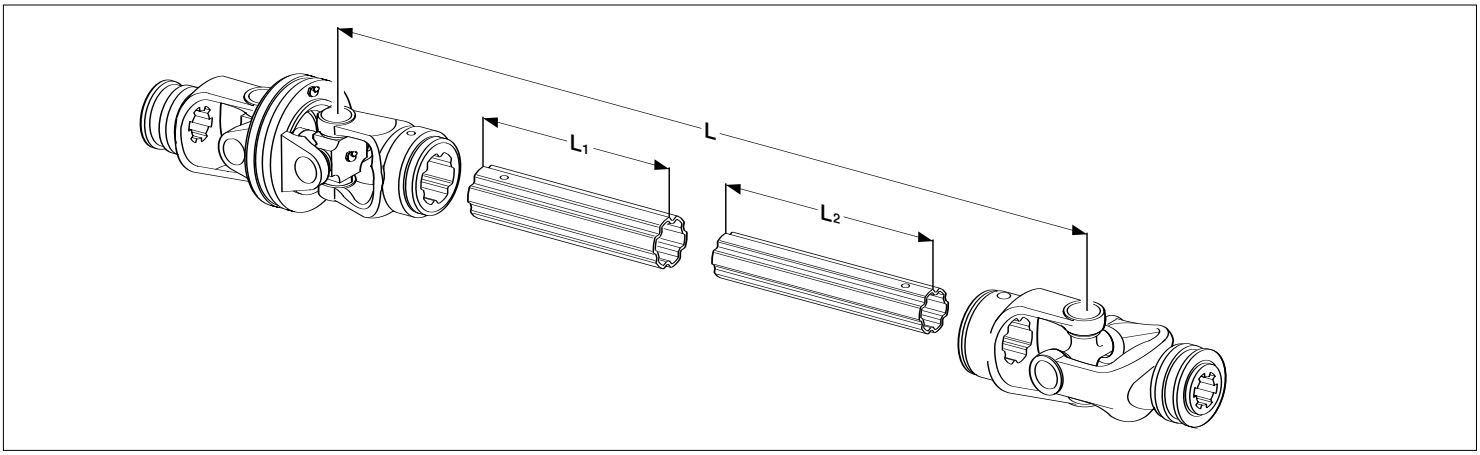

Type	20				40				60			
	L1	Cod.	L2	Cod.	L1	Cod.	L2	Cod.	L1	Cod.	L2	Cod.
L = **410**	285	159.420.006.0700	300	159.220.006	265	159.440.006.0700	280	159.240.006	250	152.260.501.0700	265	159.260.144
L = **460**	335	159.420.001.0700	350	159.220.001	315	159.440.001.0700	330	159.240.001	300	152.260.507.0700	315	159.260.160
L = **510**	385	159.420.007.0700	400	159.220.007	365	159.440.007.0700	380	159.240.007	350	152.260.502.0700	365	159.260.140
L = **560**	435	159.420.002.0700	450	159.220.002	415	159.440.002.0700	430	159.240.002	400	152.260.508.0700	415	159.260.137
L = **610**	485	159.420.008.0700	500	159.220.008	465	159.440.008.0700	480	159.240.008	450	152.260.503.0700	465	159.260.135
L = **660**	535	159.420.003.0700	550	159.220.003	515	159.440.003.0700	530	159.240.003	500	152.260.509.0700	515	159.260.138
L = **710**	585	159.420.009.0700	600	159.220.009	565	159.440.009.0700	580	159.240.009	550	152.260.504.0700	565	159.260.161
L = **760**	635	159.420.004.0700	650	159.220.004	615	159.440.004.0700	630	159.240.004	600	152.260.510.0700	615	159.260.124
L = **810**	685	159.420.010.0700	700	159.220.010	665	159.440.010.0700	680	159.240.010	650	152.260.505.0700	665	159.260.133
L = **860**	735	159.420.005.0700	750	159.220.005	715	159.440.005.0700	730	159.240.005	700	152.260.511.0700	715	159.260.147
L = **910**	785	159.420.011.0700	800	159.220.011	765	159.440.011.0700	780	159.240.011	750	152.260.517.0700	765	159.260.118
L = **1010**	885	159.420.012.0700	900	159.220.012	865	159.440.012.0700	880	159.240.012	850	152.260.512.0700	865	159.260.151
L = **1110**	985	159.420.013.0700	1000	159.220.013	965	159.440.013.0700	980	159.240.013	950	152.260.513.0700	965	159.260.148
L = **1210**	1085	159.420.014.0700	1100	159.220.014	1065	159.440.014.0700	1080	159.240.014	1050	152.260.514.0700	1065	159.260.152
L = **1310**	1185	159.420.015.0700	1200	159.220.015	1165	159.440.015.0700	1180	159.240.015	1150	152.260.515.0700	1165	159.260.155
L = **1410**	1285	159.420.016.0700	1300	159.220.016	1265	159.440.016.0700	1280	159.240.016	1250	152.260.516.0700	1265	159.260.150

Type	80			
	L1	Cod.	L2	Cod.
L = **410**	220	152.280.501.0700	235	159.280.180
L = **460**	270	152.280.507.0700	285	159.280.171
L = **510**	320	152.280.502.0700	335	159.280.137
L = **560**	370	152.280.508.0700	385	159.280.134
L = **610**	420	152.280.503.0700	435	159.280.133
L = **660**	470	152.280.509.0700	485	159.280.135
L = **710**	520	152.280.504.0700	535	159.280.179
L = **760**	570	152.280.510.0700	585	159.280.123
L = **810**	620	152.280.505.0700	635	159.280.166
L = **860**	670	152.280.511.0700	685	159.280.118
L = **910**	720	152.280.517.0700	735	159.280.143
L = **1010**	820	152.280.512.0700	835	159.280.161
L = **1110**	920	152.280.513.0700	935	159.280.181
L = **1210**	1020	152.280.514.0700	1035	159.280.168
L = **1310**	1120	152.280.515.0700	1135	159.280.182
L = **1410**	1220	152.280.516.0700	1235	159.280.183

IT

I profili tipo **20** e **40** sono trattati **NITREG**

I profili tipo **60** e **80** interni sono rivestiti **RILSAN**

GB

Profiles type 20 and 40 have NITREG treatment

Inner profiles type 60 and 80 coated with RILSAN treatment

FR

Les profils type **20** et **40** ont été soumis à un traitement de surface **NITREG**

Les profils type **60** et **80** intérieurs sont revêtus de **RILSAN**

DE

Die Profile Typ 20 und 40 sind NITREG behandelt

Die Profile Typ 60 und 80 sind mit RILSAN beschichtet

SERIE T
SERIES T
SERIE T
SERIE T

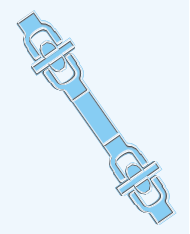

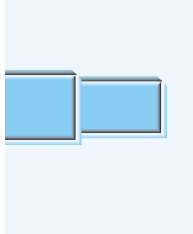

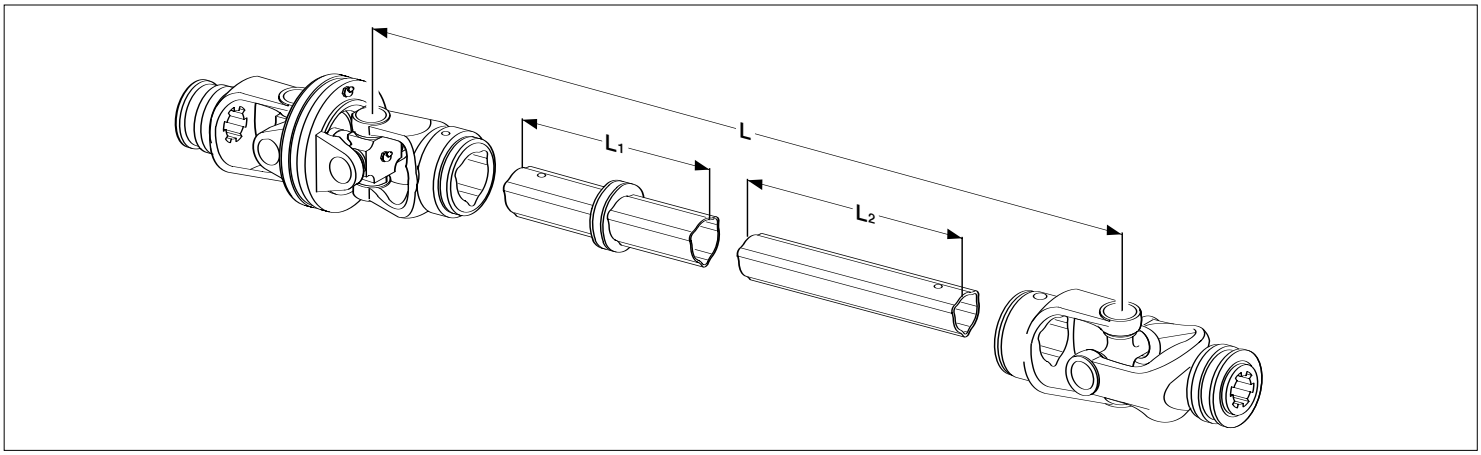

Type	20				40				60			
	L1	Cod.	L2	Cod.	L1	Cod.	L2	Cod.	L1	Cod.	L2	Cod.
L = **410**	285	152.120.501.7800	300	159.120.248	265	152.140.522.7800	280	159.140.542	250	152.160.585.7800	265	159.160.898
L = **460**	335	152.120.502.7800	350	159.120.249	315	152.140.546.7800	330	159.140.579	300	152.160.537.7800	315	159.160.837
L = **510**	385	152.120.503.7800	400	159.120.250	365	152.140.521.7800	380	159.140.539	350	152.160.561.7800	365	159.160.865
L = **560**	435	152.120.504.7800	450	159.120.243	415	152.140.537.7800	430	159.140.576	400	152.160.551.7800	415	159.160.875
L = **610**	485	152.120.505.7800	500	159.120.251	465	152.140.523.7800	480	159.140.546	450	152.160.540.7800	465	159.160.822
L = **660**	535	152.120.506.7800	550	159.120.252	515	152.140.510.7800	530	159.140.511	500	152.160.538.7800	515	159.160.836
L = **710**	585	152.120.507.7800	600	159.120.253	565	152.140.517.7800	580	159.140.535	550	152.160.532.7800	565	159.160.826
L = **760**	635	152.120.508.7800	650	159.120.241	615	152.140.519.7800	630	159.140.537	600	152.160.539.7800	615	159.160.356
L = **810**	685	152.120.509.7800	700	159.120.247	665	152.140.513.7800	680	159.140.526	650	152.160.542.7800	665	159.160.840
L = **860**	735	152.120.510.7800	750	159.120.255	715	152.140.520.7800	730	159.140.538	700	152.160.533.7800	715	159.160.832
L = **910**	785	152.120.511.7800	800	159.120.256	765	152.140.518.7800	780	159.140.536	750	152.160.543.7800	765	159.160.841
L = **1010**	885	152.120.512.7800	900	159.120.257	865	152.140.512.7800	880	159.140.522	850	152.160.544.7800	865	159.160.842
L = **1110**	985	152.120.513.7800	1000	159.120.258	965	152.140.515.7800	980	159.140.528	950	152.160.536.7800	965	159.160.855
L = **1210**	1085	152.120.514.7800	1100	159.120.259	1065	152.140.514.7800	1080	159.140.527	1050	152.160.535.7800	1065	159.160.834
L = **1310**	1185	152.120.515.7800	1200	159.120.260	1165	152.140.516.7800	1180	159.140.532	1150	152.160.545.7800	1165	159.160.843
L = **1410**	1285	152.120.526.7800	1300	159.120.261	1265	152.140.544.7800	1280	159.140.577	1250	152.160.547.7800	1265	159.160.847

Type	80			
	L1	Cod.	L2	Cod.
L = **410**	220	152.180.501.7800	235	159.190.027
L = **460**	270	152.180.502.7800	285	159.190.028
L = **510**	320	152.180.503.7800	335	159.190.029
L = **560**	370	152.180.504.7800	385	159.190.030
L = **610**	420	152.180.505.7800	435	159.190.031
L = **660**	470	152.180.506.7800	485	159.190.032
L = **710**	520	152.180.507.7800	535	159.190.033
L = **760**	570	152.180.508.7800	585	159.190.034
L = **810**	620	152.180.509.7800	635	159.190.035
L = **860**	670	152.180.510.7800	685	159.190.036
L = **910**	720	152.180.511.7800	735	159.190.037
L = **1010**	820	152.180.512.7800	835	159.190.038
L = **1110**	920	152.180.513.7800	935	159.190.039
L = **1210**	1020	152.180.514.7800	1035	159.190.040
L = **1310**	1120	152.180.515.7800	1135	159.190.041
L = **1410**	1220	152.180.538.7800	1235	159.190.529

IT

I profili interni sono rivestiti RILSAN

GB

Inner profiles coated with RILSAN treatment

FR

Les profils intérieurs sont revêtus de RILSAN

DE

Die Innenprofile sind mit RILSAN beschichtet

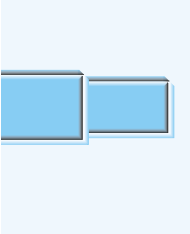

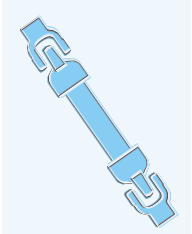

SERIE V
SERIES V
SERIE V
SERIE V

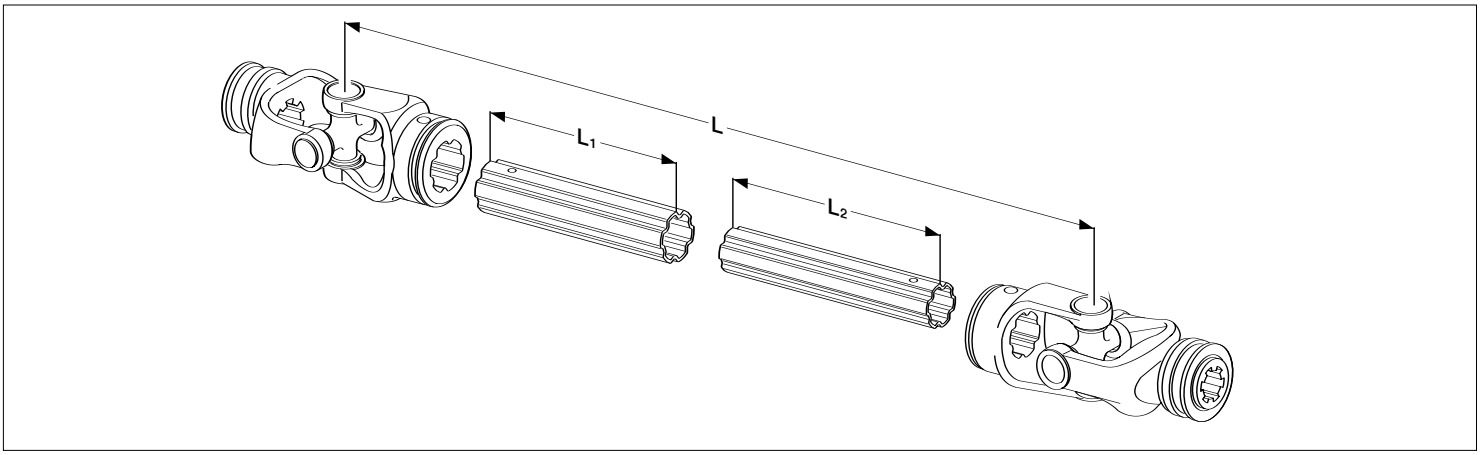

Type	20				40				50			
	L1	Cod.	L2	Cod.	L1	Cod.	L2	Cod.	L1	Cod.	L2	Cod.
L = **410**	285	152.220.006.0700	300	153.220.006	265	152.240.006.0700	280	153.240.006	260	152.260.259.0700	275	153.260.173
L = **460**	335	152.220.001.0700	350	153.220.001	315	152.240.001.0700	330	153.240.001	310	152.260.260.0700	325	153.260.174
L = **510**	385	152.220.007.0700	400	153.220.007	365	152.240.007.0700	380	153.240.007	360	152.260.234.0700	375	153.260.147
L = **560**	435	152.220.002.0700	450	153.220.002	415	152.240.002.0700	430	153.240.002	410	152.260.261.0700	425	153.260.175
L = **610**	485	152.220.008.0700	500	153.220.008	465	152.240.008.0700	480	153.240.008	460	152.260.252.0700	475	153.260.166
L = **660**	535	152.220.003.0700	550	153.220.003	515	152.240.003.0700	530	153.240.003	510	152.260.251.0700	525	153.260.165
L = **710**	585	152.220.009.0700	600	153.220.009	565	152.240.009.0700	580	153.240.009	560	152.260.262.0700	575	153.260.176
L = **760**	635	152.220.004.0700	650	153.220.004	615	152.240.004.0700	630	153.240.004	610	152.260.257.0700	625	153.260.171
L = **810**	685	152.220.010.0700	700	153.220.010	665	152.240.010.0700	680	153.240.010	660	152.260.263.0700	675	153.260.177
L = **860**	735	152.220.005.0700	750	153.220.005	715	152.240.005.0700	730	153.240.005	710	152.260.235.0700	725	153.260.148
L = **910**	785	152.220.011.0700	800	153.220.011	765	152.240.011.0700	780	153.240.011	760	152.260.264.0700	775	153.260.178
L = **1010**	885	152.220.012.0700	900	153.220.012	865	152.240.012.0700	880	153.240.012	860	152.260.233.0700	875	153.260.145
L = **1110**	985	152.220.013.0700	1000	153.220.013	965	152.240.013.0700	980	153.240.013	960	152.260.265.0700	975	153.260.180
L = **1210**	1085	152.220.014.0700	1100	153.220.014	1065	152.240.014.0700	1080	153.240.014	1060	152.260.266.0700	1075	153.260.181
L = **1310**	1185	152.220.015.0700	1200	153.220.015	1165	152.240.015.0700	1180	153.240.015	1160	152.260.267.0700	1175	153.260.182
L = **1410**	1285	152.220.016.0700	1300	153.220.016	1265	152.240.016.0700	1280	153.240.016	1260	152.260.268.0700	1275	153.260.183

Type	60				80				90			
	L1	Cod.	L2	Cod.	L1	Cod.	L2	Cod.	L1	Cod.	L2	Cod.
L = **410**	250	152.260.201.0700	265	153.260.101	220	152.280.201.0700	235	153.280.101	215	152.280.245.0700	230	159.280.174
L = **460**	300	152.260.207.0700	315	153.260.107	270	152.280.207.0700	285	153.280.107	265	152.280.239.0700	280	159.280.150
L = **510**	350	152.260.202.0700	365	153.260.102	320	152.280.202.0700	335	153.280.102	315	152.280.228.0700	330	159.280.164
L = **560**	400	152.260.208.0700	415	153.260.108	370	152.280.208.0700	385	153.280.108	365	152.280.236.0700	380	159.280.151
L = **610**	450	152.260.203.0700	465	153.260.103	420	152.280.203.0700	435	153.280.103	415	152.280.240.0700	430	159.280.152
L = **660**	500	152.260.209.0700	515	153.260.109	470	152.280.209.0700	485	153.280.109	465	152.280.231.0700	480	159.280.149
L = **710**	550	152.260.204.0700	565	153.260.104	520	152.280.204.0700	535	153.280.104	515	152.280.250.0700	530	159.280.159
L = **760**	600	152.260.210.0700	615	153.260.110	570	152.280.210.0700	585	153.280.110	565	152.280.264.0700	580	159.280.175
L = **810**	650	152.260.205.0700	665	153.260.105	620	152.280.205.0700	635	153.280.105	615	152.280.265.0700	630	159.280.170
L = **860**	700	152.260.211.0700	715	153.260.111	670	152.280.211.0700	685	153.280.111	665	152.280.266.0700	680	159.280.156
L = **910**	750	152.260.217.0700	765	153.260.117	720	152.280.217.0700	735	153.280.117	715	152.280.251.0700	730	159.280.160
L = **1010**	850	152.260.212.0700	865	153.260.112	820	152.280.212.0700	835	153.280.112	815	152.280.242.0700	830	159.280.157
L = **1110**	950	152.260.213.0700	965	153.260.113	920	152.280.213.0700	935	153.280.113	915	152.280.267.0700	930	159.280.176
L = **1210**	1050	152.260.214.0700	1065	153.260.114	1020	152.280.214.0700	1035	153.280.114	1015	152.280.232.0700	1030	159.280.177
L = **1310**	1150	152.260.215.0700	1165	153.260.115	1120	152.280.215.0700	1135	153.280.115	1115	152.280.259.0700	1130	159.280.167
L = **1410**	1250	152.260.216.0700	1265	153.260.116	1220	152.280.216.0700	1235	153.280.116	1215	152.280.268.0700	1230	159.280.178

SERIE T
SERIES T
SERIE T
SERIE T

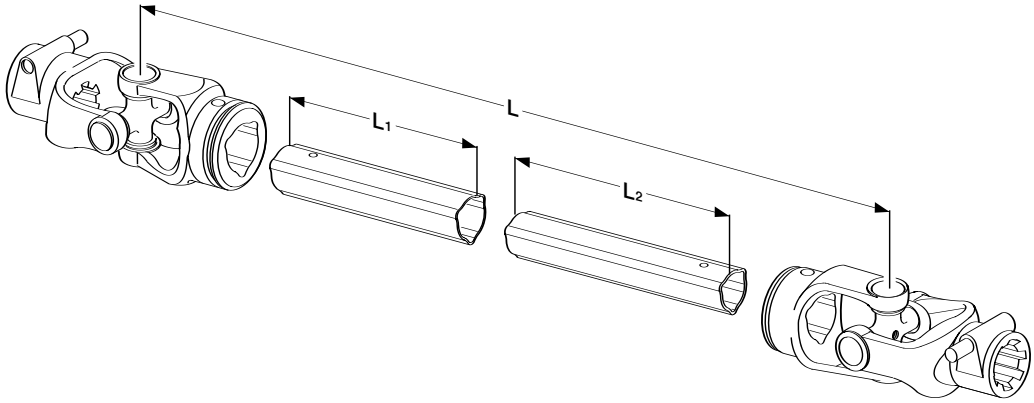

Type	10				20				40				50			
	L1	Cod.	L2	Cod.	L1	Cod.	L2	Cod.	L1	Cod.	L2	Cod.	L1	Cod.	L2	Cod.
L = **410**	290	152.110.206.0700	305	153.110.106	285	152.120.206.0700	300	153.120.106	265	152.140.206.0700	280	153.140.206	260	152.150.206.0700	275	153.150.106
L = **460**	340	152.110.346.0700	355	153.110.192	335	152.120.323.0700	350	153.120.216	315	152.140.278.0700	330	153.140.184	310	152.150.343.0700	325	153.150.345
L = **510**	390	152.110.207.0700	405	153.110.107	385	152.120.207.0700	400	153.120.107	365	152.140.207.0700	380	153.140.207	360	152.150.207.0700	375	153.150.107
L = **560**	440	152.110.243.0700	455	153.110.137	435	152.120.289.0700	450	153.120.181	415	152.140.280.0700	430	153.140.188	410	152.150.344.0700	425	153.150.346
L = **610**	490	152.110.208.0700	505	153.110.108	485	152.120.208.0700	500	153.120.108	465	152.140.208.0700	480	153.140.108	460	152.150.208.0700	475	153.260.108
L = **660**	540	152.110.344.0700	555	153.110.186	535	152.120.325.0700	550	153.120.223	515	152.140.292.0700	530	153.140.200	510	152.150.329.0700	525	153.150.347
L = **710**	590	152.110.209.0700	605	153.110.109	585	152.120.209.0700	600	153.120.109	565	152.140.209.0700	580	153.140.109	560	152.150.209.0700	575	153.150.109
L = **760**	640	152.110.219.0700	655	153.110.232	635	152.120.262.0700	650	153.120.160	615	152.140.296.0700	630	153.140.401	610	152.150.345.0700	625	153.150.348
L = **810**	690	152.110.210.0700	705	153.110.110	685	152.120.210.0700	700	153.120.110	665	152.140.210.0700	680	153.140.110	660	152.150.210.0700	675	153.150.110
L = **860**	740	152.110.347.0700	755	153.110.189	735	152.120.326.0700	750	153.120.224	715	152.140.258.0700	730	153.140.165	710	152.150.337.0700	725	153.150.349
L = **910**	790	152.110.211.0700	805	153.110.111	785	152.120.211.0700	800	153.120.111	765	152.140.211.0700	780	153.140.111	760	152.150.211.0700	775	153.150.111
L = **1010**	890	152.110.212.0700	905	153.110.112	885	152.120.212.0700	900	153.120.112	865	152.140.212.0700	880	153.140.112	860	152.150.212.0700	875	153.150.112
L = **1110**	990	152.110.213.0700	1005	153.110.113	985	152.120.213.0700	1000	153.120.113	965	152.140.213.0700	980	153.140.113	960	152.150.213.0700	975	153.150.113
L = **1210**	1090	152.110.214.0700	1105	153.110.114	1085	152.120.214.0700	1100	153.120.114	1065	152.140.214.0700	1080	153.140.114	1060	152.150.214.0700	1075	153.150.114
L = **1310**	1190	152.110.215.0700	1205	153.110.115	1185	152.120.215.0700	1200	153.120.115	1165	152.140.215.0700	1080	153.140.115	1160	152.150.215.0700	1175	153.150.115
L = **1410**	1290	152.110.339.0700	1305	153.110.230	1285	152.120.335.0700	1300	153.120.239	1265	152.140.662.0700	1280	153.140.519	1260	152.150.340.0700	1275	153.150.342

Type	60				80				90			
	L1	Cod.	L2	Cod.	L1	Cod.	L2	Cod.	L1	Cod.	L2	Cod.
L = **410**	250	152.160.476.0700	265	153.160.823	220	152.198.136.0700	235	153.190.001	215	152.198.501.0700	230	153.190.501
L = **460**	300	152.160.207.0700	315	153.150.107	270	152.198.137.0700	285	153.190.002	265	152.198.502.0700	280	153.190.502
L = **510**	350	152.180.298.0700	365	153.160.148	320	152.198.138.0700	335	153.190.003	315	152.198.503.0700	330	153.190.503
L = **560**	400	152.160.208.0700	415	153.160.108	370	152.198.139.0700	385	153.190.004	365	152.198.504.0700	380	153.190.504
L = **610**	450	152.160.475.0700	465	153.160.150	420	152.198.140.0700	435	153.190.005	415	152.198.505.0700	430	153.190.505
L = **660**	500	152.160.209.0700	515	153.160.109	470	152.198.117.0700	485	153.190.006	465	152.198.506.0700	480	153.190.506
L = **710**	550	152.160.473.0700	565	153.160.174	520	152.198.141.0700	535	153.190.007	515	152.198.507.0700	530	153.190.507
L = **760**	600	152.160.210.0700	615	153.160.110	570	152.198.142.0700	585	153.190.008	565	152.198.508.0700	580	153.190.508
L = **810**	650	152.160.472.0700	665	153.160.738	620	152.198.143.0700	635	153.190.009	615	152.198.509.0700	630	153.190.509
L = **860**	700	152.160.211.0700	715	153.160.111	670	152.198.144.0700	685	153.190.010	665	152.198.510.0700	680	153.190.510
L = **910**	750	152.160.477.0700	765	153.160.798	720	152.198.135.0700	735	153.190.011	715	152.198.511.0700	730	153.190.511
L = **1010**	850	152.160.212.0700	865	153.160.112	820	152.198.145.0700	835	153.190.012	815	152.198.512.0700	830	153.190.512
L = **1110**	950	152.160.213.0700	965	153.160.113	920	152.198.146.0700	935	153.190.013	915	152.198.513.0700	930	153.190.513
L = **1210**	1050	152.160.214.0700	1065	153.160.114	1020	152.198.147.0700	1035	153.190.014	1015	152.198.514.0700	1030	153.190.514
L = **1310**	1150	152.160.215.0700	1165	153.160.115	1120	152.198.131.0700	1135	153.190.015	1115	152.198.515.0700	1130	153.190.515
L = **1410**	1250	152.160.461.0700	1265	153.150.334	1220	152.198.149.0700	1235	153.190.018	1215	152.198.538.0700	1230	153.190.523

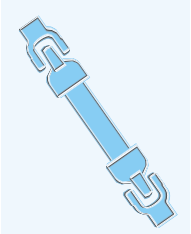

SERIE E
SERIES E
SERIE E
SERIE E

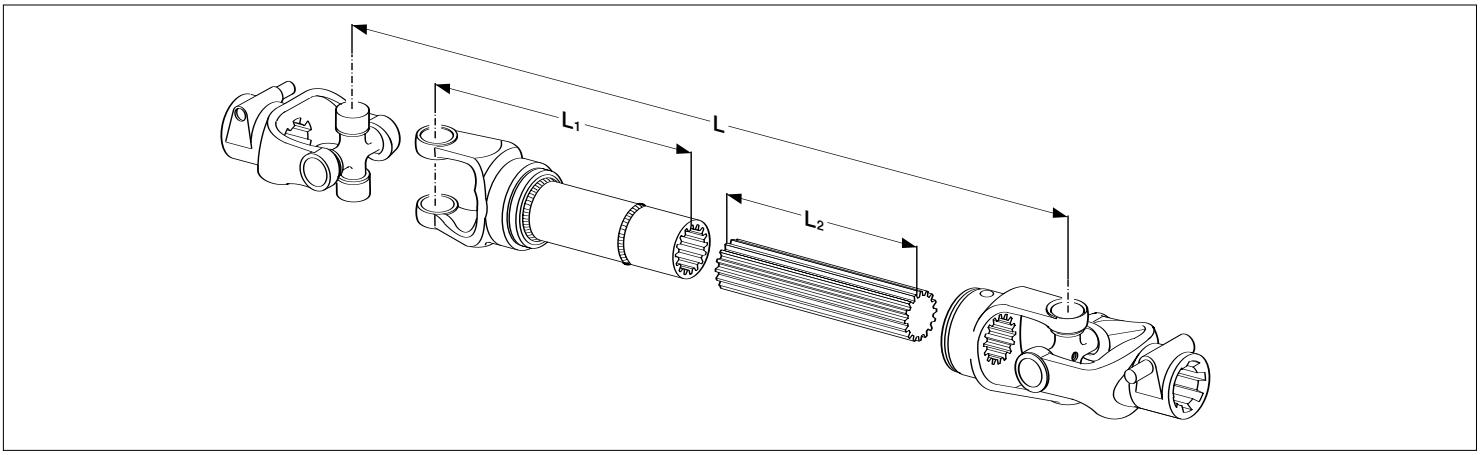

	40				50				60			
Type	L1	Cod.	L2	Cod.	L1	Cod.	L2	Cod.	L1	Cod.	L2	Cod.
L = **410**	320	122.240.806	280	155.140.606	315	122.250.806	275	155.150.606	305	122.260.825	265	155.150.654
L = **460**	370	122.240.801	330	155.140.601	365	122.250.818	325	155.150.624	355	122.260.807	315	155.160.607
L = **510**	420	122.240.807	380	155.140.607	415	122.250.807	375	155.150.607	405	122.260.826	365	155.150.634
L = **560**	470	122.240.802	430	155.140.602	465	122.250.819	425	155.150.625	455	122.260.808	415	155.160.608
L = **610**	520	122.240.808	480	155.140.608	515	122.250.808	475	155.150.608	505	122.260.827	465	155.150.645
L = **660**	570	122.240.803	530	155.140.603	565	122.250.820	525	155.150.626	555	122.260.809	515	155.160.609
L = **710**	620	122.240.809	580	155.140.609	615	122.250.809	575	155.150.609	605	122.260.828	565	155.150.679
L = **760**	670	122.240.804	630	155.140.604	665	122.250.821	625	155.150.627	655	122.260.810	615	155.160.610
L = **810**	720	122.240.810	680	155.140.610	715	122.250.810	675	155.150.610	705	122.260.829	665	155.150.685
L = **860**	770	122.240.805	730	155.140.605	765	122.250.822	725	155.150.628	755	122.260.811	715	155.150.611
L = **910**	820	122.240.811	780	155.140.611	815	122.250.811	775	155.160.611	805	122.460.003	765	155.150.715
L = **1010**	920	122.240.812	780	155.140.611	915	122.250.812	775	155.160.611	905	122.260.812	765	155.150.715
L = **1110**	1020	122.240.813	780	155.140.611	1015	122.250.813	775	155.160.611	1005	122.260.813	765	155.150.715
L = **1210**	1120	122.240.814	780	155.140.611	1115	122.250.814	775	155.160.611	1105	122.260.814	765	155.150.715
L = **1310**	1220	122.240.815	780	155.140.611	1215	122.250.815	775	155.160.611	1205	122.260.815	765	155.150.715
L = 1410	1320	122.240.818	780	155.140.611	1315	122.250.816	775	155.160.611	1305	122.260.816	765	155.150.715

	80				90			
Type	L1	*Type*Cod.	L2	Cod.	L1	Cod.	L2	Cod.
L = **410**	295	122.280.966	235	155.170.677	285	122.290.801	230	155.190.601
L = **460**	345	122.280.970	285	155.180.607	335	122.290.807	280	155.190.607
L = **510**	395	122.280.965	335	155.170.633	385	122.290.802	330	155.190.602
L = **560**	445	122.280.963	385	155.180.608	435	122.290.808	380	155.190.608
L = **610**	495	122.280.967	435	155.170.635	485	122.290.803	430	155.190.603
L = **660**	545	122.280.964	485	155.180.609	535	122.290.809	480	155.190.609
L = **710**	595	122.280.968	535	155.170.636	585	122.290.804	530	155.190.604
L = **760**	645	122.280.971	585	155.180.610	635	122.290.810	580	155.190.610
L = **810**	695	122.280.969	635	155.170.647	685	122.290.805	630	155.190.605
L = **860**	745	122.280.972	685	155.180.611	735	122.290.811	680	155.190.611
L = **910**	795	122.280.973	735	155.170.688	785	122.290.806	730	155.190.617
L = **1010**	895	122.480.011	735	155.170.688	885	122.290.812	730	155.190.617
L = **1110**	995	122.480.006	735	155.170.688	985	122.290.813	730	155.190.617
L = **1210**	1095	122.480.017	735	155.170.688	1085	122.290.814	730	155.190.617
L = **1310**	1195	122.480.018	735	155.170.688	1185	122.290.815	730	155.190.617
L = **1410**	1295	122.480.019	735	155.170.688	1285	122.490.002	730	155.190.617

IT

I profili scanalati sono forniti alla lunghezza richiesta, con foro per spina elastica e trattati termicamente

GB

Splined profiles are supplied with the requested length, with pin hole yoke and with heat treatment

FR

Les profils cannelés sont disponibles dans toutes les longueurs avec le trou pour la goupille élastique et traitement thermique

DE

Die Keilprofile werden in der gewünschten Länge, mit Spannstiftbohrung und hitzebehandelt geliefert

SERIE D
SERIES D
SERIE D
SERIE D

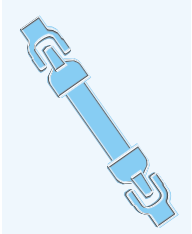

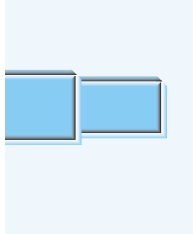

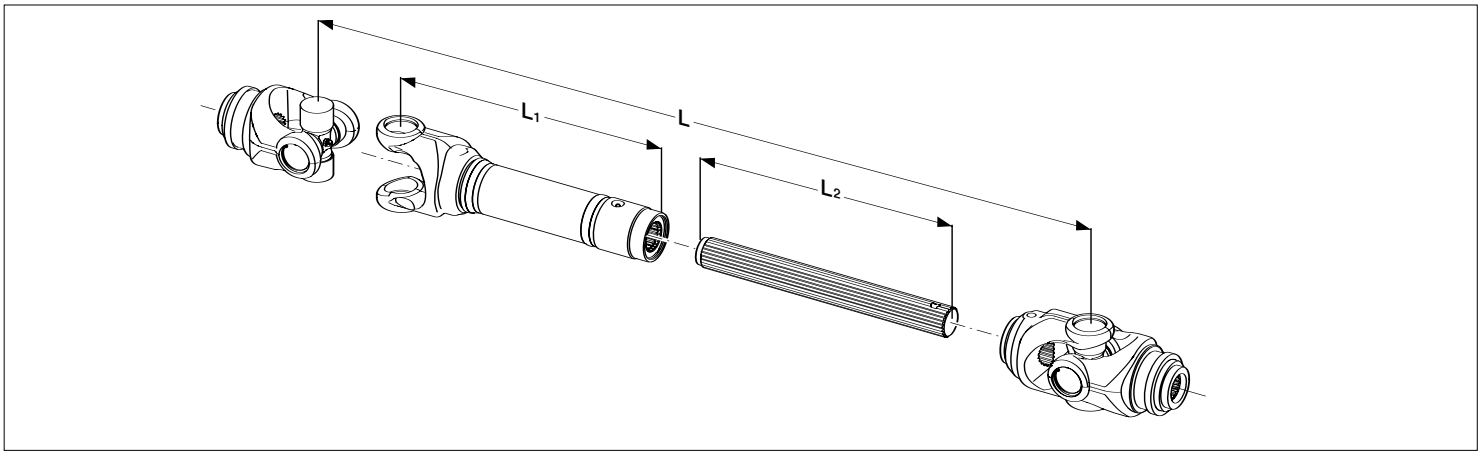

	120			
Type	L1	Cod.	L2	Cod.
L = **460**	316	122.120.001	300	155.100.011
L = **510**	366	122.120.002	350	155.100.012
L = **560**	416	122.120.003	400	155.100.006
L = **610**	466	122.120.004	450	155.100.001
L = **660**	516	122.120.005	500	155.100.004
L = **710**	566	122.120.006	550	155.100.005
L = **760**	616	122.120.007	600	155.100.013
L = **810**	666	122.120.008	650	155.100.014
L = **860**	716	122.120.009	700	155.100.007
L = **910**	766	122.120.010	750	155.100.002
L = **1010**	866	122.120.011	850	155.100.009
L = **1110**	966	122.120.012	900	155.100.008
L = **1210**	1066	122.120.013	900	155.100.008
L = **1310**	1166	122.120.014	900	155.100.008
L = **1410**	1266	122.120.015	900	155.100.008

(IT)
I profili scanalati sono forniti alla lunghezza richiesta, con foro per spina elastica e trattati termicamente

(GB)
Splined profiles are supplied with the requested length, with pin hole yoke and with heat treatment

(FR)
Les profils cannelés sont disponibles dans toutes les longueurs avec le trou pour la goupille élastique et traitement thermique

(DE)
Die Keilprofile werden in der gewünschten Länge, mit Spannstiftbohrung und hitzebehandelt geliefert

(IT)
Forcelle tubo esterna fornita completa di ingrassatore e parapolvere

(GB)
Outer tube yoke fitted with grease nipple and dust seal

(FR)
Mâchoire pour tube extérieur equipée avec graisseur et parapoussiere

(DE)
Die Aussenrohr-Gabel wird mit Schmiernippel und Staubdichtung geliefert

NOTE
NOTES
NOTES
BEMERKUNGEN

IT

Tutte le misure, ove non specificatamente indicato, sono espresse in millimetri.

I profili esterni o le forcelle tubo a misura sono fornibili a richiesta, con applicate decalcomanie tipo:
- CE - USA - CANADA -

A richiesta sono disponibili profili interni a misura, rivestiti RILSAN o con trattamento indurente.
Il profilo interno rivestito RILSAN necessita del suo profilo esterno specifico.

Per tubi con trattamenti termici contattare il nostro Ufficio Tecnico.

GB

All sizes, unless otherwise specified, are expressed in millimetres.

The outer profiles or fitted tube yokes can be supplied on request with the following decals included:
- CE - USA - CANADA -

RILSAN coated or hardened fitted inner profiles are available on request.
The RILSAN coated inner profile requires its own specific outer profile.

For tubes with heat treatments contact our Technical Department.

FR

Sauf indication contraire, toutes les mesures sont exprimées en millimètres.

Les profils extérieurs ou les mâchoires à gorge sur mesure sont disponibles, en option, avec des autocollants type:
- CE - USA - CANADA -

Des profils intérieurs sur mesure revêtus de RILSAN ou avec traitement durcissant sont disponibles en option. Le profil intérieur revêtu de RILSAN nécessite de son profil extérieur spécifique.

Pour des tubes avec traitement thermique contactez notre Bureau Technique.

DE

Wenn nicht anders vorgegeben, sind alle Maße in Millimetern angegeben.

Die Außenprofile oder Gabeln mit Rohren nach Maß werden auf Wunsch mit Aufklebern geliefert, z.B.:
- CE - USA - CANADA -

Auf Wunsch können Innenprofile nach Maß, mit RILSAN-Beschichtung oder mit Härtebehandlung gefertigt werden. Ein RILSAN-beschichtetes Innenprofil braucht sein spezielles Außenprofil.

Für hitzebehandelte Rohre wenden Sie sich bitte an unser technisches Büro.

Come ordinare un profilo esterno serie V - T • *How to order an outer profile*
Comment commander un profil extérieur série V – T • *Wie bestellt man ein Außenprofil der Serie V - T*

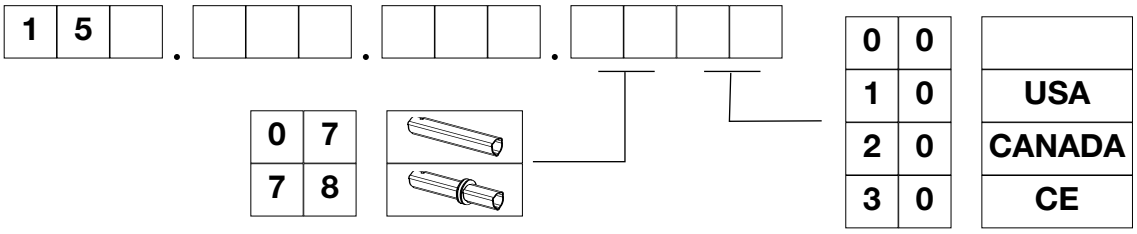

V

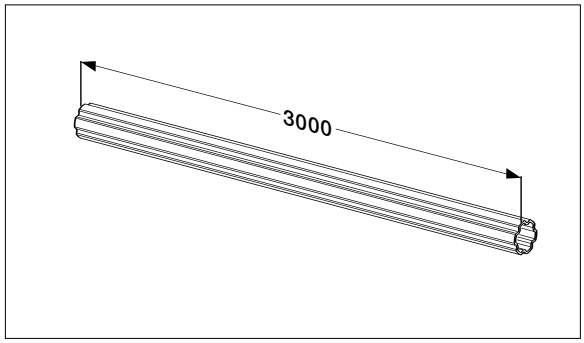

Type	tubo esterno *outer tube* tube extérieur *Außenrohr*	tubo interno *inner tube* tube intérieur *Innenrohr*
20	191.120.800	191.120.700
40	191.140.800	191.140.700
50	191.160.800	191.160.700
60	191.160.800	191.160.700
80	191.190.800	191.190.700
90	191.190.800	-

RILSAN

Type	tubo esterno *outer tube* tube extérieur *Außenrohr*
50	191.160.850
60	191.160.850
80	191.190.850
90	191.190.850

T

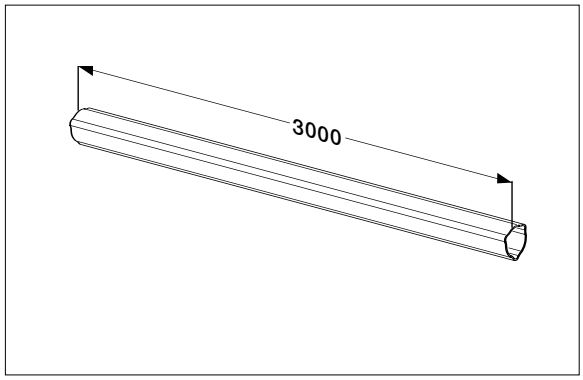

Type	tubo esterno *outer tube* tube extérieur *Außenrohr*	tubo interno *inner tube* tube intérieur *Innenrohr*
10	191.110.200	191.110.100
20	191.120.200	191.120.100
40	191.130.200	191.140.100
50	191.150.200	191.150.100
60	191.160.200	191.150.100
80	191.198.850	191.190.300
90	191.198.850	191.190.300

RILSAN

Type	tubo esterno *outer tube* tube extérieur *Außenrohr*
20	191.120.500
40	191.140.500
60	191.160.500
80	191.180.500
90	191.180.500

CvJ

PROGRAMMA DI PRODUZIONE
PRODUCTION PROGRAM
PROGRAMME DE PRODUCTION
PRODUKTPALETTE

Tipo *Type* Type *Typ*	Crociera *Cross and bearing kit* Croisillon *Kreuzgarnitur*	Corpo centrale *Double yoke* Mâchoire double *Doppelgabel*	Forcella per tubo esterno *Outer tube yoke* Mâchoire pour tube extérieur *Außenprofilgabel*	Tubo esterno *Outer tube* Tube extérieur *Außenprofil*	Tubo interno *Inner tube* Tube intérieur *Innenprofil*	Forcella per tubo interno *Inner tube yoke* Mâchoire pour tube intérieur *Innenprofilgabel*
serie / *series* / série / *serie* V — snodo singolo / *single joint* / joint simple / *Einzelgelenk*						
20	Ø23,8 – 74,1 – 82,1 cod. 180.012.161	86 cod. 141.022.160	80 – 76,5 – 22 – ø42 – 23,8 – 22 cod. 141.022.325	2,7 – ø42 pag. 58	3,5 – ø 36,2 pag. 58	80 – ø36,2 – 63,9 – 21 – 23,8 cod. 151.012.320
40	Ø27 – 85,8 – 91,2 cod. 180.014.260	95 cod. 141.024.259	91,5 – 88,2 – 24 – ø 45,7 – 27 – 24 cod. 141.024.433	3 – ø45,7 pag. 58	4,5 – ø 39,3 pag. 58	91,5 – ø39,3 – 77,2 – 24 – 27 cod. 151.014.428
60	Ø30,2 – 95,4 – 101,4 cod. 180.016.228	104 cod. 141.026.224	104 – 98,4 – 27 – ø 57,6 – 30,2 – 24 cod. 141.026.390	3,2 – ø57,6 pag. 58	4,8 – ø50,8 pag. 58	104 – ø50,2 – 94,6 – 24 – 30,2 cod. 151.016.389
80	Ø35 – 106,3 – 113,8 cod. 180.018.158	118 cod. 141.028.157	120 – 109,3 – 30 – ø 66,5 – 35 – 27 cod. 141.028.248	3,7 – ø66,5 pag. 58	5,3 – ø58,7 pag. 58	116 – ø58,1 – 109,6 – 24 – 35 cod. 151.018.242
serie / *series* / série / *serie* V — snodo doppio / *double joint* / joint double / *Doppelgelenk*						
20	Ø23,8 – 74,1 – 82,1 cod. 180.012.161	86 cod. 141.022.160	80 – 76,5 – 22 – ø42 – 23,8 – 22 cod. 141.022.325	2,7 – ø42 pag. 58	3,5 – ø 36,2 pag. 58	80 – ø36,2 – 22 – 76,5 – 21 – 23,8 cod. 141.022.326
40	Ø27 – 85,8 – 91,2 cod. 180.014.260	95 cod. 141.024.259	91,5 – 88,2 – 24 – ø 45,7 – 27 – 24 cod. 141.024.433	3 – ø45,7 pag. 58	4,5 – ø 39,3 pag. 58	91,5 – ø39,3 – 24 – 88,2 – 24 – 27 cod. 141.024.434
60	Ø30,2 – 95,4 – 101,4 cod. 180.016.228	104 cod. 141.026.224	104 – 98,4 – 27 – ø 57,6 – 30,2 – 24 cod. 141.026.390	3,2 – ø57,6 pag. 58	4,8 – ø50,8 pag. 58	104 – ø50,2 – 27 – 98,4 – 24 – 30,2 cod. 141.026.391
80	Ø35 – 106,3 – 113,8 cod. 180.018.158	118 cod. 141.028.157	120 – 109,3 – 30 – ø 66,5 – 35 – 27 cod. 141.028.248	3,7 – ø66,5 pag. 58	5,3 – ø58,7 pag. 58	120 – ø58,1 – 30 – 109,3 – 24 – 35 cod. 141.028.249

PROGRAMMA DI PRODUZIONE
PRODUCTION PROGRAM
PROGRAMME DE PRODUCTION
PRODUKTPALETTE

serie / *series* / série / *serie* — T — snodo singolo / *single joint* / joint simple / *Einzelgelenk*

20	Ø23,8 / 74,1 / 82,1 cod. 180.012.161	86 cod. 141.022.160	80 / 76,5 / 22 / 36 / 23,8 / 22 cod. 141.022.166	2,9 / 36 pag. 59	4,3 / 29,6 pag. 59	80 / 29 / 63,9 / 21 / 23,8 cod. 151.012.002
40	Ø27 / 85,8 / 91,2 cod. 180.014.260	95 cod. 141.024.259	91,5 / 88,2 / 24 / 43,5 / 27 / 24 cod. 141.024.263	3,1 / 43,5 pag. 59	4,8 / 36,6 pag. 59	91,5 / 36 / 77,2 / 24 / 27 cod. 151.014.007
60	Ø30,2 / 95,4 / 101,4 cod. 180.016.228	104 cod. 141.026.224	104 / 98,4 / 27 / 54 / 30,2 / 24 cod. 141.026.229	3,7 / 54 pag. 59	4,3 / 45,6 pag. 59	104 / 45 / 94,6 / 24 / 30,2 cod. 151.016.029
80	Ø35 / 106,3 / 113,8 cod. 180.018.158	118 cod. 141.028.157	120 / 109,3 / 30 / 63 / 35 / 27 cod. 141.028.152	3,7 / 63 pag. 59	5,3 / 54,6 pag. 59	116 / 54 / 109,6 / 24 / 35 cod. 151.018.134

serie / *series* / série / *serie* — T — snodo doppio / *double joint* / joint double / *Doppelgelenk*

20	Ø23,8 / 74,1 / 82,1 cod. 180.012.161	86 cod. 141.022.160	80 / 76,5 / 22 / 36 / 23,8 / 22 cod. 141.022.166	2,9 / 36 pag. 59	4,3 / 29,6 pag. 59	80 / 29 / 22 / 76,5 / 21 / 23,8 cod. 141.022.172
40	Ø27 / 85,8 / 91,2 cod. 180.014.260	95 cod. 141.024.259	91,5 / 88,2 / 24 / 43,5 / 27 / 24 cod. 141.024.263	3,1 / 43,5 pag. 59	4,8 / 36,6 pag. 59	91,5 / 36 / 24 / 88,2 / 24 / 27 cod. 141.024.269
60	Ø30,2 / 95,4 / 101,4 cod. 180.016.228	104 cod. 141.026.224	104 / 98,4 / 27 / 54 / 30,2 / 24 cod. 141.026.229	3,7 / 54 pag. 59	4,3 / 45,6 pag. 59	104 / 45 / 27 / 98,4 / 24 / 30,2 cod. 141.026.249
80	Ø35 / 106,3 / 113,8 cod. 180.018.158	118 cod. 141.028.157	120 / 109,3 / 30 / 63 / 35 / 27 cod. 141.028.152	3,7 / 63 pag. 59	5,3 / 54,6 pag. 59	120 / 54 / 30 / 109,3 / 24 / 35 cod. 141.028.165

STANDARD

Tipo *Type* Type *Typ*	Crociera *Cross and bearing kit* Croisillon *Kreuzgarnitur*	Forcella per tubo esterno *Outer tube yoke* Mâchoire pour tube extérieur *Außenprofilgabel*	Tubo esterno *Outer tube* Tube extérieur *Außenprofil*	Tubo interno *Inner tube* Tube intérieur *Innenprofil*	Forcella per tubo interno *Inner tube yoke* Mâchoire pour tube intérieur *Innenprofil*
serie / *series* / série / *serie* V					
20	Ø23,8 – 61,3 cod. 180.012.004	80 – 63,9 – ø42 – 23,8 – 22 cod. 151.012.319	2,7 – ø42 pag. 60	3,5 – ø 36,2 pag. 60	cod. 151.012.320 ø36,2 – 80 – 63,9 – 21 – 23,8
40	Ø27 – 74,6 cod. 180.014.004	91,5 – 77,2 – ø45,7 – 27 – 24 cod. 151.014.427	3 – ø45,7 pag. 60	4,5 – ø 39,3 pag. 60	cod. 151.014.428 ø39,3 – 91,5 – 77,2 – 24 – 27
50	Ø30,2 – 80 cod. 180.015.004	97 – 82,6 – ø57,6 – 30,2 – 24 cod. 151.015.361	3,5 – ø57,6 pag. 60	4,5 – ø50,2 pag. 60	cod. 151.015.362 ø50,2 – 97 – 82,6 – 24 – 30,2
60	Ø30,2 – 92 cod. 180.016.004	104 – 94,6 – ø 57,6 – 30,2 – 24 cod. 151.016.388	3,5 – ø57,6 pag. 60	4,5 – ø50,2 pag. 60	cod. 151.016.389 ø50,2 – 104 – 94,6 – 24 – 30,2
80	Ø35 – 106,5 cod. 180.018.004	120 – 109,6 – ø66,5 – 35 – 27 cod. 151.018.241	4 – ø66,5 pag. 60	5 – ø58,1 pag. 60	cod. 151.018.242 ø58,1 – 116 – 109,6 – 24 – 35
90	Ø41 – 108 cod. 180.019.043	124 – 111,6 – ø66,5 – 41 – 27 cod. 151.019.166	4 – ø66,5 pag. 60	5 – ø58,1 pag. 60	cod. 151.019.167 ø58,1 – 124 – 111,6 – 24 – 41
serie / *series* / série / *serie* T					
10	Ø22 – 54 cod. 180.011.130	80 – 56,2 – 32,5 – 22 – 22 cod. 151.011.003	2,6 – 32,5 pag. 61	3,5 – 26,5 pag. 61	cod. 151.011.002 26,5 – 80 – 56,2 – 22 – 22
20	Ø23,8 – 61,3 cod. 180.012.130	80 – 63,9 – 36 – 23,8 – 22 cod. 151.012.003	3,2 – 36 pag. 61	4 – 29 pag. 61	cod. 151.012.002 29 – 80 – 63,9 – 21 – 23,8
40	Ø27 – 74,6 cod. 180.014.130	91,5 – 77,2 – ø43,5 – 27 – 24 cod. 151.014.006	3,4 – 43,5 pag. 61	4,5 – 36 pag. 61	cod. 151.014.007 36 – 91,5 – 77,2 – 24 – 27
50	Ø30,2 – 80 cod. 180.015.130	97 – 82,6 – 51,6 – 30,2 – 24 cod. 151.015.011	3 – 51,6 pag. 61	4 – 45 pag. 61	cod. 151.015.012 45 – 97 – 82,6 – 24 – 30,2
60	Ø30,2 – 92 cod. 180.016.130	104 – 94,6 – 54 – 30,2 – 24 cod. 151.016.028	4 – 54 pag. 61	4 – 45 pag. 61	cod. 151.016.029 45 – 104 – 94,6 – 24 – 30,2

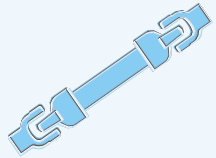

PROGRAMMA DI PRODUZIONE
PRODUCTION PROGRAM
PROGRAMME DE PRODUCTION
PRODUKTPALETTE

PROGRAMMA DI PRODUZIONE
PRODUCTION PROGRAM
PROGRAMME DE PRODUCTION
PRODUKTPALETTE

	80	cod. 180.018.130	120, 109,6, 63, 35, 27	cod. 151.018.133	pag. 61	pag. 61	cod. 151.018.134 — 116, 54, 109,6, 24, 35
	90	cod. 180.019.130	124, 111,6, 63, 41, 27	cod. 151.019.127	pag. 61	pag. 61	cod. 151.019.128 — 124, 54, 111,6, 24, 41

serie / *series* / série / *serie* — E

40	cod. 180.014.130	91,5, 77,2, ø42, 27	cod. 151.014.003	pag. 62	pag. 62	cod. 151.014.250 — 30 CUNA, 91,5, 77,2, 24, 27
50	cod. 180.015.130	97, 82,6, ø42, 30,2	cod. 151.015.003	pag. 62	pag. 62	cod. 141.015.014 — 35 CUNA, 97, 82,6, 24, 30,2
60	cod. 180.016.130	104, 94,6, ø42, 30,2	cod. 151.016.035	pag. 62	pag. 62	cod. 151.016.031 — 35 CUNA, 104, 94,6, 24, 30,2
80	cod. 180.018.130	120, 109,6, ø50, 35	cod. 151.018.144	pag. 62	pag. 62	cod. 151.018.145 — 40 CUNA, 116, 109,6, 24, 35
90	cod. 180.019.130	124, 111,6, ø52,5, 41	cod. 151.019.055	pag. 62	pag. 62	cod. 151.019.054 — 45 CUNA, 124, 111,6, 27, 41

serie / *series* / série / *serie* — D

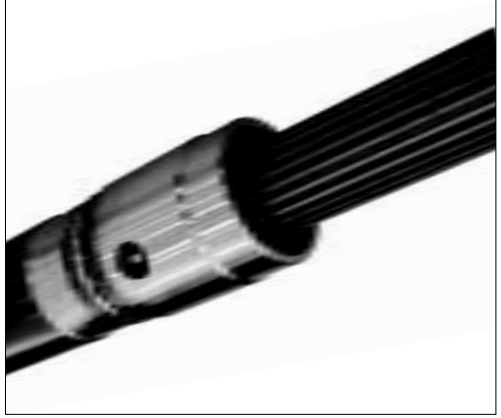

120	cod. 180.120.004	141, 130, ø 62, 52		pag. 62	pag. 62	cod. 151.120.003 — DIN 5482 z.24, 141, 130, 36, 52